A		1PC	H	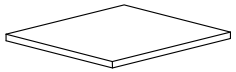	2PCS
B	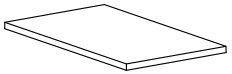	3PCS	I	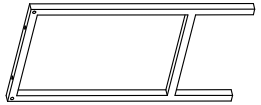	4PCS
C	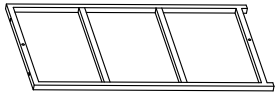	1PC	J	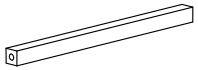	8PCS
D	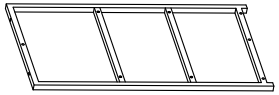	1PC	K	M6×30mm	26PCS
E	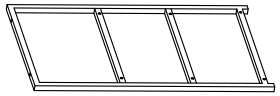	1PC	L	M6×40mm	32PCS
F		2PCS	M	4mm	1PC
G		6PCS			

ASSEMBLY INSTRUCTION

DO NOT TIGHTEN SCREWS UNTIL COMPLETELY ASSEMBLED

1

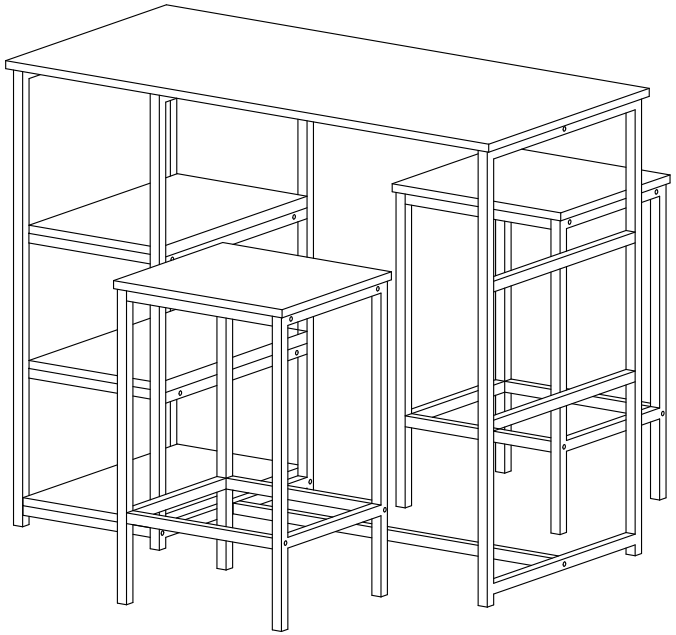

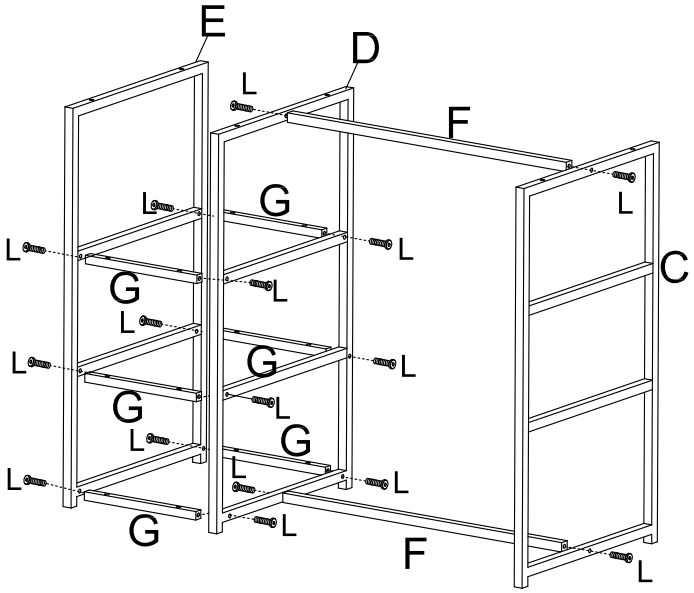

2

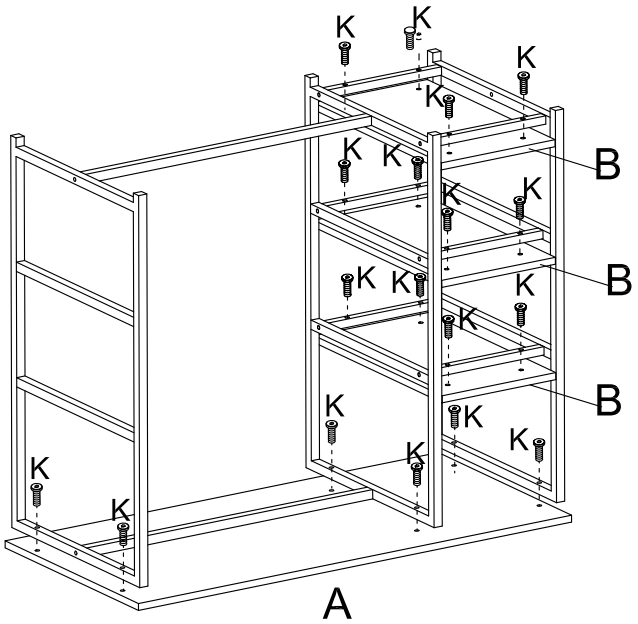

3

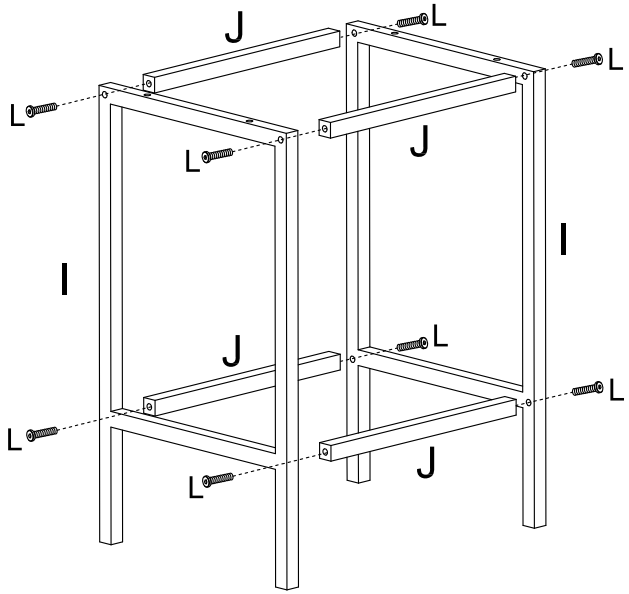

×2

4

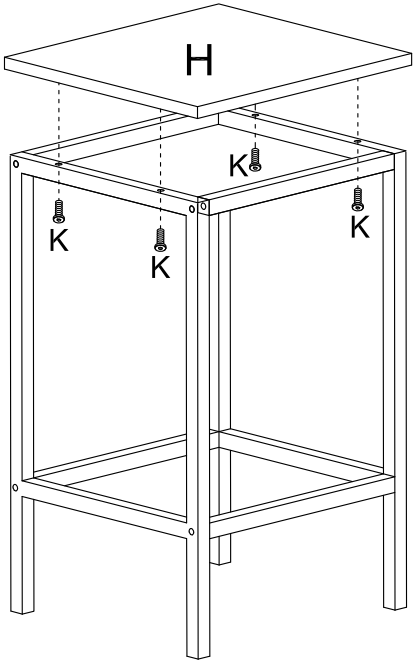

×2

5

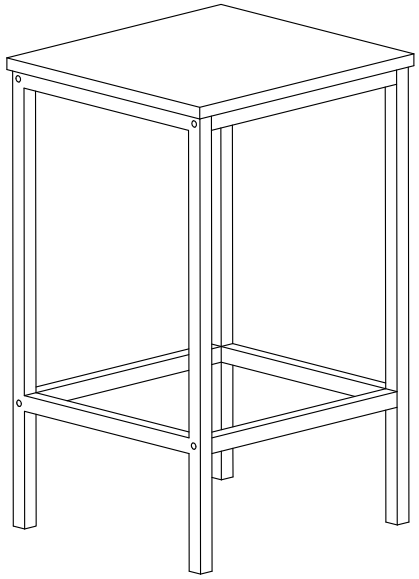

×2